enCoRe™ III Full Speed USB Controller

1.0 Features

- Powerful Harvard Architecture Processor
  - M8C Processor Speeds to 24 MHz
  - Two 8x8 Multiply, 32-bit Accumulate
  - 3.0 to 5.25V Operating Voltage
  - USB Temperature Range: 0°C to +70°C
- Advanced Peripherals (enCoRe™ III Blocks)
  - Analog enCoRe III Block Provides:
    - Up to 14-bit ADCs
  - 4 Digital enCoRe III Blocks Provide:
    - 8-bit PWMs
    - Full-Duplex UART
    - Multiple SPI Masters or Slaves
    - Connectable to all GPIO Pins
- Complex Peripherals by Combining Blocks
- Full-Speed USB (12 Mbps)
  - Four Unidirectional Endpoints
  - One Bidirectional Control Endpoint
  - USB 2.0 Compliant
  - Dedicated 256 Byte Buffer
  - No External Crystal Required
- Flexible On-Chip Memory
  - 16K Flash Program Storage 50,000 Erase/Write Cycles
  - 1K SRAM Data Storage
  - In-System Serial Programming (ISSP)
  - Partial Flash Updates
  - Flexible Protection Modes
  - EEPROM Emulation in Flash
- Programmable Pin Configurations
  - 25-mA Sink on all GPIO
  - Pull-up, Pull-down, High- Z, Strong, or Open Drain Drive Modes on all GPIO
  - Configurable Interrupt on all GPIO
- Precision, Programmable Clocking
  - Internal ±4% 24-/48-MHz Oscillator
  - Internal Oscillator for Watchdog and Sleep
  - 0.25% Accuracy for USB with no External Components
- Additional System Resources
  - I^2C™ Slave, Master, and Multi-Master to 400 kHz
  - Watchdog and Sleep Timers
  - User-Configurable Low Voltage Detection
  - Integrated Supervisory Circuit
  - On-Chip Precision Voltage Reference
- Complete Development Tools
  - Free Development Software (PSoC™ Designer)
  - Full-Featured, In-Circuit Emulator and Programmer
  - Full Speed Emulation
  - Complex Breakpoint Structure
  - 128K Bytes Trace Memory

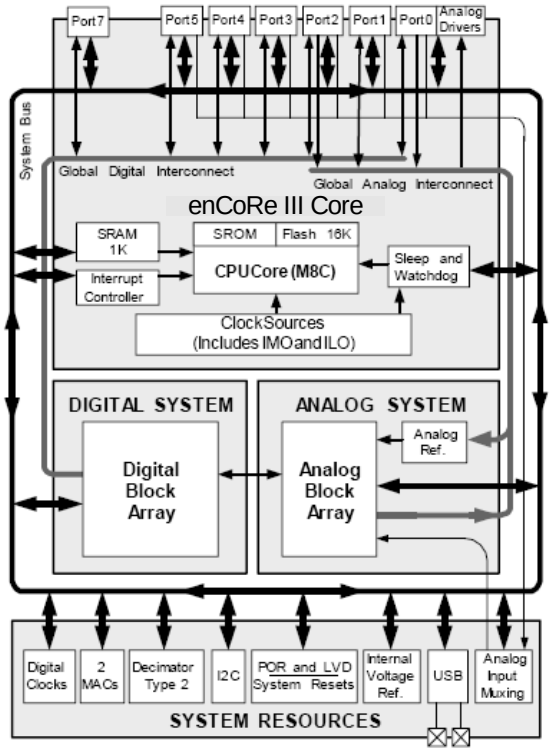

Figure 1-1. enCoRe III Block Diagram

2.0 Applications

- PC HID devices
  - Mice (Optomechanical, Optical, Trackball)
  - Keyboards
  - Joysticks
- Gaming
  - Game Pads
  - Console Keyboards
- General Purpose
  - Barcode Scanners
  - POS Terminal
  - Consumer Electronics
  - Toys
  - Remote Controls
  - USB to Serial

3.0 enCoRe III Functional Overview

enCoRe III is based on the flexible PSoC architecture and is a full-featured, full-speed (12 Mbps) USB part. Configurable analog, digital, and interconnect circuitry enable a high level of integration in a host of consumer, and communication applications.

This architecture allows the user to create customized peripheral configurations that match the requirements of each individual application. Additionally, a fast CPU, Flash program memory, SRAM data memory, and configurable IO are included in both 28-pin SSOP and 56-pin QFN packages.

The enCoRe III architecture, as illustrated in *Figure 1-1*, is comprised of four main areas: enCoRe III Core, Digital System, Analog System, and System Resources including a full-speed USB port. Configurable global busing allows all the device resources to be combined into a complete custom system. The enCoRe III CY7C64215 can have up to seven IO ports that connect to the global digital and analog interconnects, providing access to 4 digital blocks and 1 analog block.

3.1 enCoRe III Core

The enCoRe III Core is a powerful engine that supports a rich feature set. The core includes a CPU, memory, clocks, and configurable GPIO (General Purpose IO).

The M8C CPU core is a powerful processor with speeds up to 24 MHz, providing a four MIPS 8-bit Harvard architecture microprocessor. The CPU utilizes an interrupt controller with up to 20 vectors, to simplify programming of real-time embedded events. Program execution is timed and protected using the included Sleep and Watch Dog Timers (WDT).

Memory encompasses 16K of Flash for program storage, 1K of SRAM for data storage, and up to 2K of EEPROM emulated using the Flash. Program Flash utilizes four protection levels on blocks of 64 bytes, allowing customized software IP protection.

enCoRe III incorporates flexible internal clock generators, including a 24-MHz IMO (internal main oscillator) accurate to 8% over temperature and voltage. The 24-MHz IMO can also be doubled to 48 MHz for use by the digital system. A low-power 32 kHz ILO (internal low-speed oscillator) is provided for the Sleep timer and WDT. The clocks, together with programmable clock dividers (as a System Resource), provide the flexibility to integrate almost any timing requirement into the enCoRe III. In USB systems, the IMO will self-tune to ±0.25% accuracy for USB communication.

enCoRe III GPIOs provide connection to the CPU, digital and analog resources of the device. Each pin's drive mode may be selected from eight options, allowing great flexibility in external interfacing. Every pin also has the capability to generate a system interrupt on high level, low level, and change from last read.

3.2 The Digital System

The Digital System is composed of 4 digital enCoRe III blocks. Each block is an 8-bit resource that can be used alone or combined with other blocks to form 8, 16, 24, and 32-bit peripherals, which are called user module references.

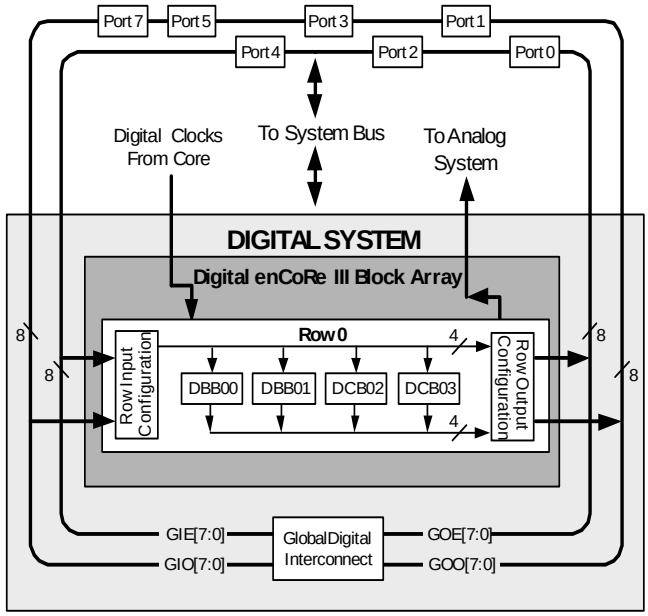

Figure 3-1. Digital System Block Diagram

Digital peripheral configurations include those listed below.

- Full-Speed USB (12 Mbps)
- PWMs (8-bit)
- UART 8-bit with selectable parity
- SPI master and slave
- I2C slave and multi-master

The digital blocks can be connected to any GPIO through a series of global buses that can route any signal to any pin. The buses also allow for signal multiplexing and for performing logic operations. This configurability frees your designs from the constraints of a fixed peripheral controller.

3.3 The Analog System

The Analog System is composed of 1 configurable block, comprised of an opamp circuit allowing the creation of complex analog signal flows. Analog peripherals are very

flexible and can be customized to support specific application requirements. enCoRe III analog function supports the Analog-to-digital converters (up to 2, with 6- to 14-bit resolution, selectable as Incremental, Delta Sigma, and SAR)

Analog blocks are arranged in a column of three, which includes one CT (Continuous Time - AC B00 or AC B01) and two SC (Switched Capacitor - ASC10 and ASD20 or ASD11 and ASC21) blocks, as shown in *Figure 3-2*.

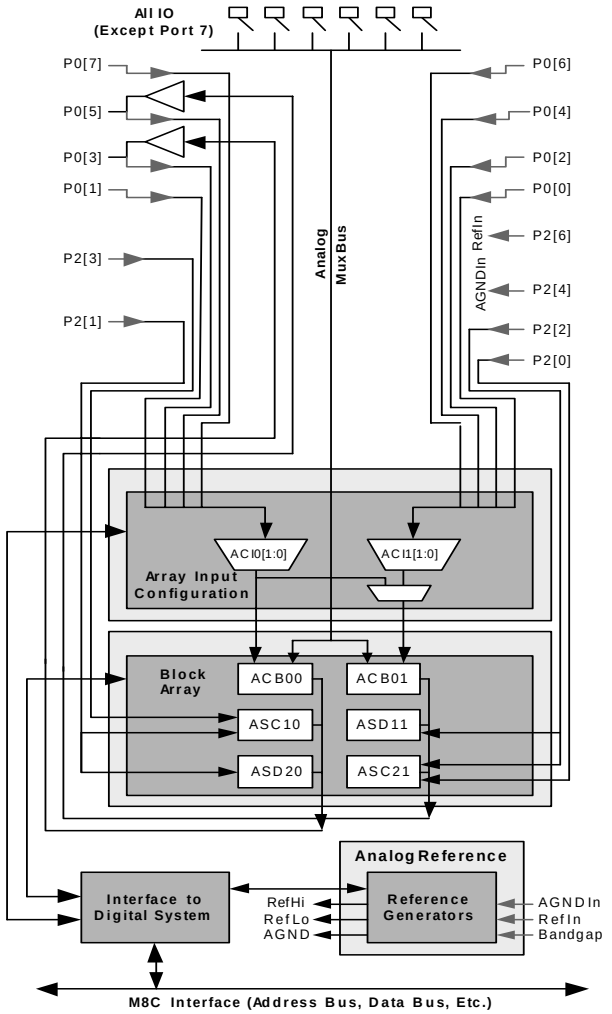

Figure 3-2. Analog System Block Diagram

3.3.1 The Analog Multiplexer System

The Analog Mux Bus can connect to every GPIO pin in ports 0–5. Pins can be connected to the bus individually or in any combination. The bus also connects to the analog system for analysis with comparators and analog-to-digital converters. It can be split into two sections for simultaneous dual-channel processing. An additional 8:1 analog input multiplexer provides a second path to bring Port 0 pins to the analog array.

3.4 Additional System Resources

System Resources provide additional capability useful to complete systems. Additional resources include a multiplier, decimator, low voltage detection, and power-on reset. Brief statements describing the merits of each resource follow.

- Full-Speed USB (12 Mbps) with 5 configurable endpoints and 256 bytes of RAM. No external components required except two series resistors. Wider than commercial temperature USB operation (–10°C to +85°C).
- Two multiply accumulates (MACs) provide fast 8-bit multipliers with 32-bit accumulate, to assist in both general math as well as digital filters.
- The decimator provides a custom hardware filter for digital signal processing applications including the creation of Delta Sigma ADCs.
- Digital clock dividers provide three customizable clock frequencies for use in applications. The clocks can be routed to both the digital and analog systems.
- The I2C module provides 100 and 400 kHz communication over two wires. Slave, master, and multi-master modes are all supported.
- Low Voltage Detection (LVD) interrupts can signal the application of falling voltage levels, while the advanced POR (Power On Reset) circuit eliminates the need for a system supervisor.
- HAPI interface for a 8-bit bus width to accommodate data transfer with an external microcontroller or similar device.

3.5 enCoRe III Device Characteristics

enCoRe III devices have 4 digital blocks and 6 analog blocks. The following table lists the resources available for specific enCoRe III device.

Table 3-1. enCoRe III Device Characteristics

Part Number	Digital IO	Digital Rows	Digital Blocks	Analog Inputs	Analog Outputs	Analog Columns	Analog Blocks	SRAM Size	Flash Size
CY7C64215 -28PVXC	up to 22	1	4	22	2	2	6	1K	16K
CY7C64215 -56LFXC	up to 50	1	4	48	2	2	6	1K	16K

4.0 Getting Started

The quickest path to understanding enCoRe III silicon is by reading this data sheet and using the PSoC Designer Integrated Development Environment (IDE). This data sheet is an overview of the enCoRe III integrated circuit and presents specific pin, register, and electrical specifications. enCoRe III is based on the architecture of the CY8C24794. For in-depth information, along with detailed programming information, reference the *PSoC™ Mixed-Signal Array Technical Reference Manual*.

For up-to-date Ordering, Packaging, and Electrical Specification information, reference the latest enCoRe III device data sheets on the web at http://www.cypress.com.

4.1 Development Kits

Development Kits are available from the following distributors: Digi-Key, Avnet, Arrow, and Future. The Cypress Online Store

contains development kits, **C** compilers, and all accessories for enCoRe III development. Go to the Cypress Online Store web site at http://www.cypress.com, click the Online Store shopping cart icon at the bottom of the web page, and click *USB (Universal Serial Bus)* to view a current list of available items.

5.0 Development Tools

PSoC Designer is a Microsoft® Windows®-based, integrated development environment for the enCoRe III. The PSoC Designer IDE and application runs on Windows NT 4.0, Windows 2000, Windows Millennium (Me), or Windows XP. (Refer to the PSoC Designer Functional Flow diagram below.)

PSoC Designer helps the customer to select an operating configuration for the enCoRe III, write application code that uses the enCoRe III, and debug the application. This system provides design database management by project, an integrated debugger with In-Circuit Emulator, in-system programming support, and the CYASM macro assembler for the CPUs.

PSoC Designer also supports a high-level C language compiler developed specifically for the devices in the family.

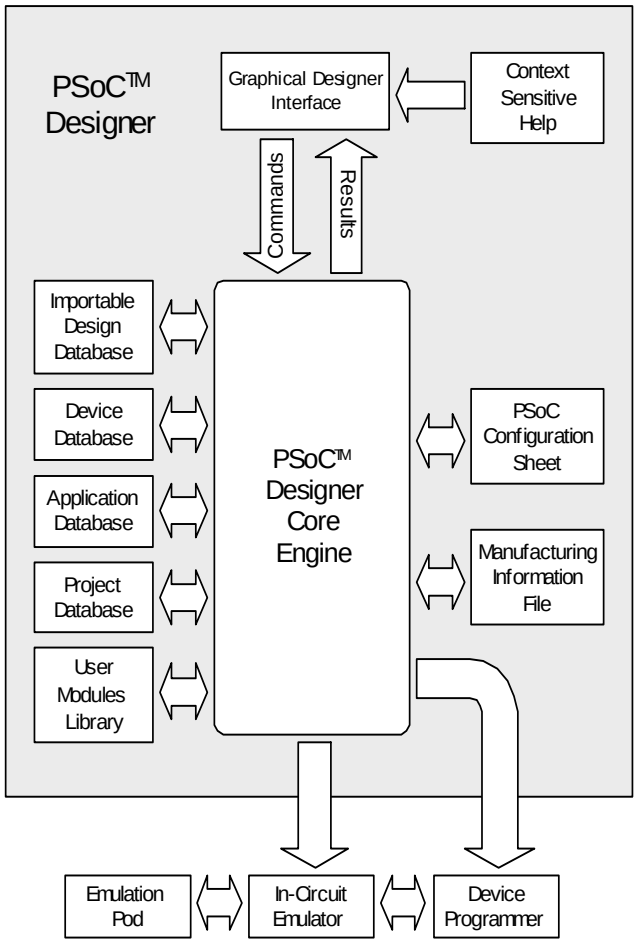

Figure 5-1. PSoC Designer Subsystems

5.1 PSoC Designer Software Subsystems

5.1.1 Device Editor

The Device Editor subsystem allows the user to select different onboard analog and digital components called user modules using the enCoRe III blocks. Examples of user modules are ADCs, SPIM, UART, and PWMs.

The device editor also supports easy development of multiple configurations and dynamic reconfiguration. Dynamic configuration allows for changing configurations at run time.

PSoC Designer sets up power-on initialization tables for selected enCoRe III block configurations and creates source code for an application framework. The framework contains software to operate the selected components and, if the project uses more than one operating configuration, contains routines to switch between different sets of enCoRe III block configurations at run time. PSoC Designer can print out a configuration sheet for a given project configuration for use during application programming in conjunction with the Device Data Sheet. Once the framework is generated, the user can add application-specific code to flesh out the framework. It's also possible to change the selected components and regenerate the framework.

5.1.2 Application Editor

In the Application Editor you can edit your C language and Assembly language source code. You can also assemble, compile, link, and build.

Assembler. The macro assembler allows the assembly code to be merged seamlessly with C code. The link libraries automatically use absolute addressing or can be compiled in relative mode, and linked with other software modules to get absolute addressing.

C Language Compiler. A C language compiler is available that supports the enCoRe III family of devices. Even if you have never worked in the C language before, the product quickly allows you to create complete C programs for the enCoRe III devices.

The embedded, optimizing C compiler provides all the features of C tailored to the enCoRe III architecture. It comes complete with embedded libraries providing port and bus operations, standard keypad and display support, and extended math functionality.

5.1.3 Debugger

The PSoC Designer Debugger subsystem provides hardware in-circuit emulation, allowing the designer to test the program in a physical system while providing an internal view of the enCoRe III device. Debugger commands allow the designer to read and program and read and write data memory, read and write IO registers, read and write CPU registers, set and clear breakpoints, and provide program run, halt, and step control. The debugger also allows the designer to create a trace buffer of registers and memory locations of interest.

5.1.4 Online Help System

The online help system displays online, context-sensitive help for the user. Designed for procedural and quick reference,

each functional subsystem has its own context-sensitive help. This system also provides tutorials and links to FAQs and an Online Support Forum to aid the designer in getting started.

5.2 Hardware Tools

5.2.1 In-Circuit Emulator

A low-cost, high-functionality ICE Cube is available for development support. This hardware has the capability to program single devices.

The emulator consists of a base unit that connects to the PC by way of a USB port. The base unit is universal and will operate with all enCoRe III devices.

6.0 Designing with User Modules

The development process for the enCoRe III device differs from that of a traditional fixed-function microprocessor. The configurable analog and digital hardware blocks give the enCoRe III architecture a unique flexibility that pays dividends in managing specification change during development and by lowering inventory costs. These configurable resources, called enCoRe III Blocks, have the ability to implement a wide variety of user-selectable functions. Each block has several registers that determine its function and connectivity to other blocks, multiplexers, buses and to the IO pins. Iterative development cycles permit you to adapt the hardware as well as the software. This substantially lowers the risk of having to select a different part to meet the final design requirements.

To speed the development process, the PSoC Designer Integrated Development Environment (IDE) provides a library of pre-built, pre-tested hardware peripheral functions, called “User Modules.” User modules make selecting and implementing peripheral devices simple, and come in analog, digital, and mixed signal varieties. The User Module library contains 8 peripherals: ADCINC, PWM8, UART, SPIM, SPIS, LCD, I2CHW, I2CM and USBFS.

Each user module establishes the basic register settings that implement the selected function. It also provides parameters that allow you to tailor its precise configuration to your particular application. For example, a Pulse Width Modulator User Module configures one or more digital PSoC blocks, one for each 8 bits of resolution. The user module parameters permit the designer to establish the pulse width and duty cycle. User modules also provide tested software to cut development time. The user module application programming interface (API) provides high-level functions to control and respond to hardware events at run-time. The API also provides optional interrupt service routines that can be adapted as needed.

The API functions are documented in user module data sheets that are viewed directly in the PSoC Designer IDE. These data sheets explain the internal operation of the user module and provide performance specifications. Each data sheet describes the use of each user module parameter and documents the setting of each register controlled by the user module.

The development process starts when you open a new project and bring up the Device Editor, a graphical user interface (GUI) for configuring the hardware. You pick the user modules you need for your project and map them onto the PSoC blocks with point-and-click simplicity. Next, you build signal chains by interconnecting user modules to each other and the IO pins. At this stage, you also configure the clock source connections and enter parameter values directly or by selecting values from drop-down menus. When you are ready to test the hardware configuration or move on to developing code for the project, you perform the “Generate Application” step. This causes PSoC Designer to generate source code that automatically configures the device to your specification and provides the high-level user module API functions.

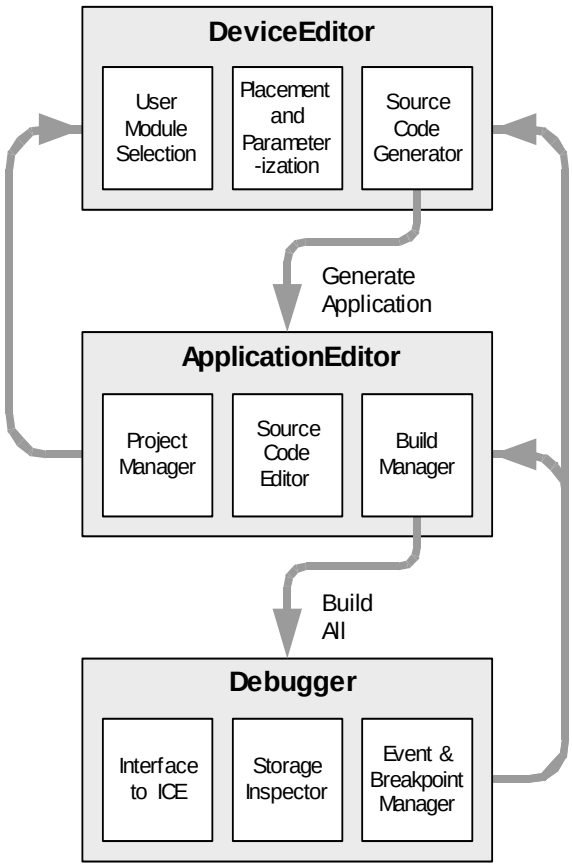

Figure 6-1. User Module and Source Code Development Flows

The next step is to write your main program, and any subroutines using PSoC Designer’s Application Editor subsystem. The Application Editor includes a Project Manager that allows you to open the project source code files (including all generated code files) from a hierarchal view. The source code editor provides syntax coloring and advanced edit features for both C and assembly language. File search capabilities include simple string searches and recursive “grep-style” patterns. A single mouse click invokes the Build Manager. It employs a professional-strength “makefile” system to automatically analyze all file dependencies and run the compiler and assembler as necessary. Project-level options control optimization strategies used by the compiler and linker. Syntax errors are displayed in a console window. Double clicking the error message takes you directly to the offending line of source code. When all is correct, the linker builds a HEX file image suitable for programming.

The last step in the development process takes place inside the PSoC Designer's Debugger subsystem. The Debugger downloads the HEX image to the In-Circuit Emulator (ICE CUBE) where it runs at full speed. Debugger capabilities rival those of systems costing many times more. In addition to traditional single-step, run-to-breakpoint and watch-variable features, the Debugger provides a large trace buffer and allows you define complex breakpoint events that include monitoring address and data bus values, memory locations and external signals.

7.0 Document Conventions

7.1 Acronyms Used

The following table lists the acronyms that are used in this document.

Acronym	Description
AC	alternating current
ADC	analog-to-digital converter
API	application programming interface
CPU	central processing unit
CT	continuous time
ECO	external crystal oscillator
EEPROM	electrically erasable programmable read-only memory
FSR	full scale range
GPIO	general purpose IO
GUI	graphical user interface
HBM	human body model
ICE	in-circuit emulator
ILO	internal low speed oscillator
IMO	internal main oscillator
IO	input/output
IPOR	imprecise power on reset
LSb	least-significant bit
LVD	low voltage detect
MSb	most-significant bit
PC	program counter
PLL	phase-locked loop
POR	power on reset
PPOR	precision power on reset
PSoC	Programmable System-on-Chip™
PWM	pulse width modulator
SC	switched capacitor
SRAM	static random access memory

7.2 Units of Measure

A units of measure table is located in the Electrical Specifications section. *Table 11-1* on page 11 lists all the abbreviations used to measure the enCoRe III devices.

7.3 Numeric Naming

Hexidecimal numbers are represented with all letters in uppercase with an appended lowercase 'h' (for example, '14h' or '3Ah'). Hexidecimal numbers may also be represented by a '0x' prefix, the C coding convention. Binary numbers have an appended lowercase 'b' (e.g., 01010100b' or '01000011b'). Numbers not indicated by an 'h' or 'b' are decimal.

8.0 56-Pin Part Pinout

The CY7C64215 enCoRe III device is available in a 56-pin package which is listed and illustrated in the following table. Every port pin (labeled with a “P”) is capable of Digital IO. However, Vss and Vdd are not capable of Digital IO.

Table 8-1. 56-Pin Part Pinout (MLF*)

Pin No.	Type		Name	Description
	Digital	Analog		
1	IO	I, M	P2[3]	Direct switched capacitor block input.
2	IO	I, M	P2[1]	Direct switched capacitor block input.
3	IO	M	P4[7]	
4	IO	M	P4[5]	
5	IO	M	P4[3]	
6	IO	M	P4[1]	
7	IO	M	P3[7]	
8	IO	M	P3[5]	
9	IO	M	P3[3]	
10	IO	M	P3[1]	
11	IO	M	P5[7]	
12	IO	M	P5[5]	
13	IO	M	P5[3]	
14	IO	M	P5[1]	
15	IO	M	P1[7]	I2C Serial Clock (SCL).
16	IO	M	P1[5]	I2C Serial Data (SDA).
17	IO	M	P1[3]	
18	IO	M	P1[1]	I2C Serial Clock (SCL), ISSP-SCLK.
19	Power		Vss	Ground connection.
20	USB		D+	
21	USB		D-	
22	Power		Vdd	Supply voltage.
23	IO		P7[7]	
24	IO		P7[0]	
25	IO	M	P1[0]	I2C Serial Data (SDA), ISSP-SDATA.
26	IO	M	P1[2]	
27	IO	M	P1[4]	
28	IO	M	P1[6]	
29	IO	M	P5[0]	
30	IO	M	P5[2]	
31	IO	M	P5[4]	
32	IO	M	P5[6]	
33	IO	M	P3[0]	
34	IO	M	P3[2]	
35	IO	M	P3[4]	
36	IO	M	P3[6]	
37	IO	M	P4[0]	
38	IO	M	P4[2]	
39	IO	M	P4[4]	
40	IO	M	P4[6]	
41	IO	I, M	P2[0]	Direct switched capacitor block input.
42	IO	I, M	P2[2]	Direct switched capacitor block input.
43	IO	M	P2[4]	External Analog Ground (AGND) input.
44	IO	M	P2[6]	External Voltage Reference (VREF) input.
45	IO	I, M	P0[0]	Analog column mux input.
46	IO	I, M	P0[2]	Analog column mux input and column output.
47	IO	I, M	P0[4]	Analog column mux input and column output.
48	IO	I, M	P0[6]	Analog column mux input.
49	Power		Vdd	Supply voltage.
50	Power		Vss	Ground connection.
51	IO	I, M	P0[7]	Analog column mux input, integration input #1.
52	IO	IO, M	P0[5]	Analog column mux input and column output, integration input #2.
53	IO	IO, M	P0[3]	Analog column mux input and column output.
54	IO	I, M	P0[1]	Analog column mux input.
55	IO	M	P2[7]	
56	IO	M	P2[5]	

CY7C64215 56-Pin enCoRe III Device

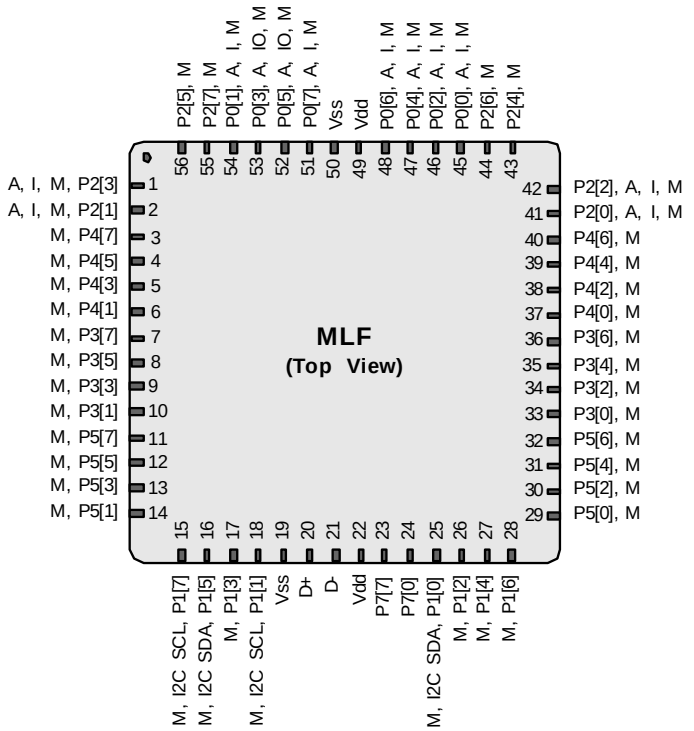

LEGEND A = Analog, I = Input, O = Output, and M = Analog Mux Input.
* The MLF package has a center pad that must be connected to ground (Vss).

9.0 28-Pin Part Pinout

The CY7C64215 enCoRe III device is available in a 28-pin package which is listed and illustrated in the following table. Every port pin (labeled with a “P”) is capable of Digital IO. However, Vss and Vdd are not capable of Digital IO.

Table 9-1. 28-Pin Part Pinout (SSOP)

Pin No.	Type		Name	Description
	Digital	Analog		
1	Power		GND	Ground connection
2	IO	I, M	P0[7]	Analog column mux input, integration input #1.
3	IO	IO,M	P0[5]	Analog column mux input and column output, integration input #2.
4	IO	IO,M	P0[3]	Analog column mux input and column output.
5	IO	I,M	P0[1]	Analog column mux input.
6	IO	M	P2[5]	
7	IO	M	P2[3]	Direct switched capacitor block input.
8	IO	M	P2[1]	Direct switched capacitor block input.
9	IO	M	P1[7]	I2C Serial Clock (SCL).
10	IO	M	P1[5]	I2C Serial Data (SDA).
11	IO	M	P1[3]	
12	IO	M	P1[1]	I2C Serial Clock (SCL), ISSP-SCLK.
13	Power		GND	Ground connection
14	USB		D+	
15	USB		D-]	
16	Power		Vdd	Supply voltage.
17	IO	M	P1[0]	I2C Serial Data (SDA), ISSP-SDATA.
18	IO	M	P1[2]	
19	IO	M	P1[4]	
20	IO	M	P1[6]	
21	IO	M	P2[0]	Direct switched capacitor block input.
22	IO	M	P2[2]	Direct switched capacitor block input.
23	IO	M	P2[4]	External Analog Ground (AGND) input.
24	IO	M	P0[0]	Analog column mux input.
25	IO	M	P0[2]	Analog column mux input and column output.
26	IO	M	P0[4]	Analog column mux input and column output.
27	IO	M	P0[6]	Analog column mux input.
28	Power		Vdd]	Supply voltage.

CY7C64215 28-Pin enCoRe III Device

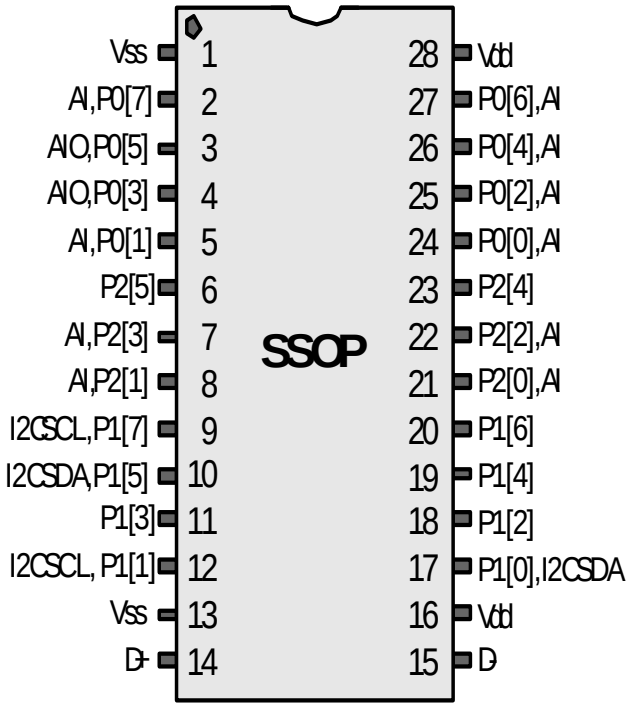

LEGEND A = Analog, I = Input, O = Output, and M = Analog Mux Input.
* The MLF package has a center pad that must be connected to ground (Vss).

10.0 Register Reference

10.1 Register Conventions

10.1.1 Abbreviations Used

The register conventions specific to this section are listed in the following table.

Convention	Description
R	Read register or bit(s)
W	Write register or bit(s)
L	Logical register or bit(s)
C	Clearable register or bit(s)
#	Access is bit specific

10.2 Register Mapping Tables

The enCoRe III device has a total register address space of 512 bytes. The register space is referred to as IO space and is divided into two banks. The XOI bit in the Flag register (CPU_F) determines which bank the user is currently in. When the XOI bit is set the user is in Bank 1.

Note In the following register mapping tables, blank fields are Reserved and should not be accessed.

10.3 Register Map Bank 0 Table: User Space

Name	Addr (0,Hex)	Access	Name	Addr (0,Hex)	Access	Name	Addr (0,Hex)	Access	Name	Addr (0,Hex)	Access
PRT0DR	00	RW	PMA0_DR	40	RW	ASC10CR0	80	RW		C0	
PRT0IE	01	RW	PMA1_DR	41	RW	ASC10CR1	81	RW		C1	
PRT0GS	02	RW	PMA2_DR	42	RW	ASC10CR2	82	RW		C2	
PRT0DM2	03	RW	PMA3_DR	43	RW	ASC10CR3	83	RW		C3	
PRT1DR	04	RW	PMA4_DR	44	RW	ASD11CR0	84	RW		C4	
PRT1IE	05	RW	PMA5_DR	45	RW	ASD11CR1	85	RW		C5	
PRT1GS	06	RW	PMA6_DR	46	RW	ASD11CR2	86	RW		C6	
PRT1DM2	07	RW	PMA7_DR	47	RW	ASD11CR3	87	RW		C7	
PRT2DR	08	RW	USB_SOF0	48	R		88			C8	
PRT2IE	09	RW	USB_SOF1	49	R		89			C9	
PRT2GS	0A	RW	USB_CR0	4A	RW		8A			CA	
PRT2DM2	0B	RW	USBIO_CR0	4B	#		8B			CB	
PRT3DR	0C	RW	USBIO_CR1	4C	RW		8C			CC	
PRT3IE	0D	RW		4D			8D			CD	
PRT3GS	0E	RW	EP1_CNT1	4E	#		8E			CE	
PRT3DM2	0F	RW	EP1_CNT	4F	RW		8F			CF	
PRT4DR	10	RW	EP2_CNT1	50	#	ASD20CR0	90	RW	CUR_PP	D0	RW
PRT4IE	11	RW	EP2_CNT	51	RW	ASD20CR1	91	RW	STK_PP	D1	RW
PRT4GS	12	RW	EP3_CNT1	52	#	ASD20CR2	92	RW		D2	
PRT4DM2	13	RW	EP3_CNT	53	RW	ASD20CR3	93	RW	IDX_PP	D3	RW
PRT5DR	14	RW	EP4_CNT1	54	#	ASC21CR0	94	RW	MVR_PP	D4	RW
PRT5IE	15	RW	EP4_CNT	55	RW	ASC21CR1	95	RW	MVW_PP	D5	RW
PRT5GS	16	RW	EP0_CR	56	#	ASC21CR2	96	RW	I2C_CFG	D6	RW
PRT5DM2	17	RW	EP0_CNT	57	#	ASC21CR3	97	RW	I2C_SCR	D7	#
	18		EP0_DR0	58	RW		98		I2C_DR	D8	RW
	19		EP0_DR1	59	RW		99		I2C_MSCR	D9	#
	1A		EP0_DR2	5A	RW		9A		INT_CLR0	DA	RW
	1B		EP0_DR3	5B	RW		9B		INT_CLR1	DB	RW
PRT7DR	1C	RW	EP0_DR4	5C	RW		9C		INT_CLR2	DC	RW
PRT7IE	1D	RW	EP0_DR5	5D	RW		9D		INT_CLR3	DD	RW
PRT7GS	1E	RW	EP0_DR6	5E	RW		9E		INT_MSK3	DE	RW
PRT7DM2	1F	RW	EP0_DR7	5F	RW		9F		INT_MSK2	DF	RW
DBB00DR0	20	#	AMX_IN	60	RW		A0		INT_MSK0	E0	RW
DBB00DR1	21	W	AMUXCFG	61	RW		A1		INT_MSK1	E1	RW
DBB00DR2	22	RW		62			A2		INT_VC	E2	RC
DBB00CR0	23	#	ARF_CR	63	RW		A3		RES_WDT	E3	W
DBB01DR0	24	#	CMP_CR0	64	#		A4		DEC_DH	E4	RC
DBB01DR1	25	W	ASY_CR	65	#		A5		DEC_DL	E5	RC
DBB01DR2	26	RW	CMP_CR1	66	RW		A6		DEC_CR0	E6	RW
DBB01CR0	27	#		67			A7		DEC_CR1	E7	RW
DCB02DR0	28	#		68		MUL1_X	A8	W	MUL0_X	E8	W
DCB02DR1	29	W		69		MUL1_Y	A9	W	MUL0_Y	E9	W
DCB02DR2	2A	RW		6A		MUL1_DH	AA	R	MUL0_DH	EA	R
DCB02CR0	2B	#		6B		MUL1_DL	AB	R	MUL0_DL	EB	R
DCB03DR0	2C	#	TMP_DR0	6C	RW	ACC1_DR1	AC	RW	ACC0_DR1	EC	RW
DCB03DR1	2D	W	TMP_DR1	6D	RW	ACC1_DR0	AD	RW	ACC0_DR0	ED	RW
DCB03DR2	2E	RW	TMP_DR2	6E	RW	ACC1_DR3	AE	RW	ACC0_DR3	EE	RW
DCB03CR0	2F	#	TMP_DR3	6F	RW	ACC1_DR2	AF	RW	ACC0_DR2	EF	RW
	30		ACB00CR3	70	RW	RDI0RI	B0	RW		F0	
	31		ACB00CR0	71	RW	RDI0SYN	B1	RW		F1	
	32		ACB00CR1	72	RW	RDI0IS	B2	RW		F2	
	33		ACB00CR2	73	RW	RDI0LT0	B3	RW		F3	
	34		ACB01CR3	74	RW	RDI0LT1	B4	RW		F4	
	35		ACB01CR0	75	RW	RDI0RO0	B5	RW		F5	
	36		ACB01CR1	76	RW	RDI0RO1	B6	RW		F6	
	37		ACB01CR2	77	RW		B7		CPU_F	F7	RL
	38			78			B8			F8	
	39			79			B9			F9	
	3A			7A			BA			FA	
	3B			7B			BB			FB	
	3C			7C			BC			FC	
	3D			7D			BD		DAC_D	FD	RW
	3E			7E			BE		CPU_SCR1	FE	#
	3F			7F			BF		CPU_SCR0	FF	#

Blank fields are Reserved and should not be accessed. # Access is bit specific.

10.4 Register Map Bank 1 Table: Configuration Space

Name	Addr (1,Hex)	Access	Name	Addr (1,Hex)	Access	Name	Addr (1,Hex)	Access	Name	Addr (1,Hex)	Access
PRT0DM0	00	RW	PMA0_WA	40	RW	ASC10CR0	80	RW	USBIO_CR2	C0	RW
PRT0DM1	01	RW	PMA1_WA	41	RW	ASC10CR1	81	RW	USB_CR1	C1	#
PRT0IC0	02	RW	PMA2_WA	42	RW	ASC10CR2	82	RW			
PRT0IC1	03	RW	PMA3_WA	43	RW	ASC10CR3	83	RW			
PRT1DM0	04	RW	PMA4_WA	44	RW	ASD11CR0	84	RW	EP1_CR0	C4	#
PRT1DM1	05	RW	PMA5_WA	45	RW	ASD11CR1	85	RW	EP2_CR0	C5	#
PRT1IC0	06	RW	PMA6_WA	46	RW	ASD11CR2	86	RW	EP3_CR0	C6	#
PRT1IC1	07	RW	PMA7_WA	47	RW	ASD11CR3	87	RW	EP4_CR0	C7	#
PRT2DM0	08	RW		48			88			C8	
PRT2DM1	09	RW		49			89			C9	
PRT2IC0	0A	RW		4A			8A			CA	
PRT2IC1	0B	RW		4B			8B			CB	
PRT3DM0	0C	RW		4C			8C			CC	
PRT3DM1	0D	RW		4D			8D			CD	
PRT3IC0	0E	RW		4E			8E			CE	
PRT3IC1	0F	RW		4F			8F			CF	
PRT4DM0	10	RW	PMA0_RA	50	RW		90		GDI_O_IN	D0	RW
PRT4DM1	11	RW	PMA1_RA	51	RW	ASD20CR1	91	RW	GDI_E_IN	D1	RW
PRT4IC0	12	RW	PMA2_RA	52	RW	ASD20CR2	92	RW	GDI_O_OU	D2	RW
PRT4IC1	13	RW	PMA3_RA	53	RW	ASD20CR3	93	RW	GDI_E_OU	D3	RW
PRT5DM0	14	RW	PMA4_RA	54	RW	ASC21CR0	94	RW		D4	
PRT5DM1	15	RW	PMA5_RA	55	RW	ASC21CR1	95	RW		D5	
PRT5IC0	16	RW	PMA6_RA	56	RW	ASC21CR2	96	RW		D6	
PRT5IC1	17	RW	PMA7_RA	57	RW	ASC21CR3	97	RW		D7	
	18			58			98		MUX_CR0	D8	RW
	19			59			99		MUX_CR1	D9	RW
	1A			5A			9A		MUX_CR2	DA	RW
	1B			5B			9B		MUX_CR3	DB	RW
PRT7DM0	1C	RW		5C			9C			DC	
PRT7DM1	1D	RW		5D			9D		OSC_GO_EN	DD	RW
PRT7IC0	1E	RW		5E			9E		OSC_CR4	DE	RW
PRT7IC1	1F	RW		5F			9F		OSC_CR3	DF	RW
DBB00FN	20	RW	CLK_CR0	60	RW		A0		OSC_CR0	E0	RW
DBB00IN	21	RW	CLK_CR1	61	RW		A1		OSC_CR1	E1	RW
DBB00OU	22	RW	ABF_CR0	62	RW		A2		OSC_CR2	E2	RW
	23		AMD_CR0	63	RW		A3		VLT_CR	E3	RW
DBB01FN	24	RW	CMP_GO_EN	64	RW		A4		VLT_CMP	E4	R
DBB01IN	25	RW	CMP_GO_EN1	65	RW		A5			E5	
DBB01OU	26	RW	AMD_CR1	66	RW		A6			E6	
	27		ALT_CR0	67	RW		A7			E7	
DCB02FN	28	RW		68			A8		IMO_TR	E8	W
DCB02IN	29	RW		69			A9		ILO_TR	E9	W
DCB02OU	2A	RW		6A			AA		BDG_TR	EA	RW
	2B			6B			AB		ECO_TR	EB	W
DCB03FN	2C	RW	TMP_DR0	6C	RW		AC		MUX_CR4	EC	RW
DCB03IN	2D	RW	TMP_DR1	6D	RW		AD		MUX_CR5	ED	RW
DCB03OU	2E	RW	TMP_DR2	6E	RW		AE			EE	
	2F		TMP_DR3	6F	RW		AF			EF	
	30		ACB00CR3	70	RW	RDI0RI	B0	RW		F0	
	31		ACB00CR0	71	RW	RDI0SYN	B1	RW		F1	
	32		ACB00CR1	72	RW	RDI0IS	B2	RW		F2	
	33		ACB00CR2	73	RW	RDI0LT0	B3	RW		F3	
	34		ACB01CR3	74	RW	RDI0LT1	B4	RW		F4	
	35		ACB01CR0	75	RW	RDI0RO0	B5	RW		F5	
	36		ACB01CR1	76	RW	RDI0RO1	B6	RW		F6	
	37		ACB01CR2	77	RW		B7		CPU_F	F7	RL
	38			78			B8			F8	
	39			79			B9			F9	
	3A			7A			BA			FA	
	3B			7B			BB			FB	
	3C			7C			BC			FC	
	3D			7D			BD		DAC_CR	FD	RW
	3E			7E			BE		CPU_SCR1	FE	#
	3F			7F			BF		CPU_SCR0	FF	#

Blank fields are Reserved and should not be accessed. # Access is bit specific.

11.0 Electrical Specifications

This section presents the DC and AC electrical specifications of the CY7C64215 enCoRe III. For the most up to date electrical specifications, confirm that you have the most recent data sheet by going to the web at http://www.cypress.com.

Specifications are valid for 0°C ≤ T_A ≤ 70°C and T_J ≤ 100°C, except where noted. Specifications for devices running at greater than 12 MHz are valid for 0°C ≤ T_A ≤ 70°C and T_J ≤ 82°C.

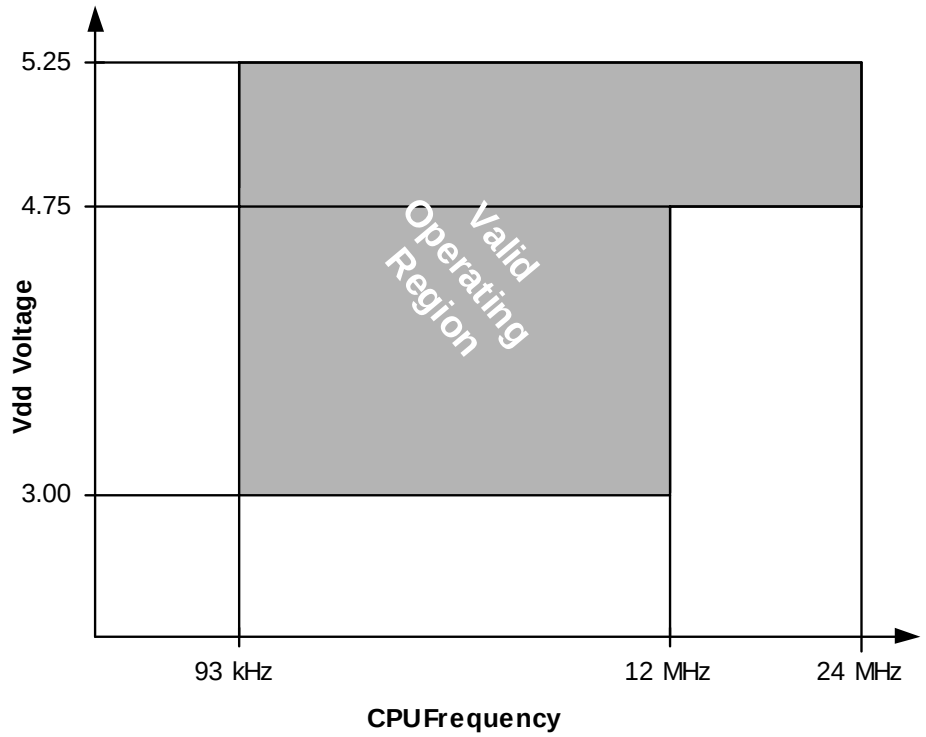

Figure 11-1. Voltage versus CPU Frequency

The following table lists the units of measure that are used in this section.

Table 11-1. Units of Measure

Symbol	Unit of Measure	Symbol	Unit of Measure
°C	degree Celsius	µW	microwatts
dB	decibels	mA	milliampere
fF	femto farad	ms	millisecond
Hz	hertz	mV	millivolts
KB	1024 bytes	nA	nanoampere
Kbit	1024 bits	ns	nanosecond
kHz	kilohertz	nV	nanovolts
kΩ	kilohm	W	ohm
MHz	megahertz	pA	picoampere
MΩ	megaohm	pF	picofarad
µA	microampere	pp	peak-to-peak
µF	microfarad	ppm	parts per million
µH	microhenry	ps	picosecond
µs	microsecond	sps	samples per second
µV	microvolts	s	sigma: one standard deviation
µVrms	microvolts root-mean-square	V	volts

11.1 Absolute Maximum Ratings

Table 11-2. Absolute Maximum Ratings

Parameter	Description	Min.	Typ.	Max.	Unit	Notes
T_{STG}	Storage Temperature	–55	–	+100	°C	Higher storage temperatures will reduce data retention time.
T_A	Ambient Temperature with Power Applied	–40	–	+85	°C	
Vdd	Supply Voltage on Vdd Relative to Vss	–0.5	–	+6.0	V	
V_{IO}	DC Input Voltage	Vss – 0.5	–	Vdd + 0.5	V	
V_{IO2}	DC Voltage Applied to Tri-state	Vss – 0.5	–	Vdd + 0.5	V	
I_{MIO}	Maximum Current into any Port Pin	–25	–	+50	mA	
I_{MAIO}	Maximum Current into any Port Pin Configured as Analog Driver	–50	–	+50	mA	
ESD	Electro Static Discharge Voltage	2000	–	–	V	Human Body Model ESD.
LU	Latch-up Current	–	–	200	mA	

11.2 Operating Temperature

Table 11-3. Operating Temperature

Parameter	Description	Min.	Typ.	Max.	Unit	Notes
T_A	Ambient Temperature	0	–	+70	°C	
T_J	Junction Temperature	0	–	+88	°C	The temperature rise from ambient to junction is package specific. See “Thermal Impedance” on page 24. The user must limit the power consumption to comply with this requirement.

11.3 DC Electrical Characteristics

11.3.1 DC Chip-Level Specifications

The following table lists guaranteed maximum and minimum specifications for the voltage and temperature ranges: 4.75V to 5.25V and 0°C ≤ T_A ≤ 70°C, or 3.0V to 3.6V and 0°C ≤ T_A ≤ 70°C, respectively. Typical parameters apply to 5V and 3.3V at 25°C and are for design guidance only.

Table 11-4. DC Chip-Level Specifications

Parameter	Description	Min.	Typ.	Max.	Unit	Notes
Vdd	Supply Voltage	3.0	–	5.25	V	See DC POR and LVD specifications, *Table 11-12* on page 16.
I_{DD5}	Supply Current, IMO = 24 MHz (5V)	–	14	27	mA	Conditions are Vdd = 5.0V, T_A = 25°C, CPU = 3 MHz, SYSCLK doubler disabled, VC1 = 1.5 MHz, VC2 = 93.75 kHz, VC3 = 93.75 kHz, analog power = off.
I_{DD3}	Supply Current, IMO = 24 MHz (3.3V)	–	8	14	mA	Conditions are Vdd = 3.3V, T_A = 25°C, CPU = 3 MHz, SYSCLK doubler disabled, VC1 = 1.5 MHz, VC2 = 93.75 kHz, VC3 = 0.367 kHz, analog power = off.
I_{SB}	Sleep (Mode) Current with POR, LVD, Sleep Timer, and WDT.[1]	–	3	6.5	µA	Conditions are with internal slow speed oscillator, Vdd = 3.3V, 0°C ≤ T_A ≤ 55°C, analog power = off.
I_{SBH}	Sleep (Mode) Current with POR, LVD, Sleep Timer, and WDT at high temperature.[1]	–	4	25	µA	Conditions are with internal slow speed oscillator, Vdd = 3.3V, 55°C < T_A ≤ 70°C, analog power = off.

Note:
1. Standby current includes all functions (POR, LVD, WDT, Sleep Time) needed for reliable system operation. This should be compared with devices that have similar functions enabled.

11.3.2 DC General Purpose IO Specifications

The following table lists guaranteed maximum and minimum specifications for the voltage and temperature ranges: 4.75V to 5.25V and 0°C ≤ T_A ≤ 70°C, or 3.0V to 3.6V and 0°C ≤ T_A ≤ 70°C, respectively. Typical parameters apply to 5V and 3.3V at 25°C and are for design guidance only.

Table 11-5. DC GPIO Specifications

Parameter	Description	Min.	Typ.	Max.	Unit	Notes
R_{PU}	Pull-Up Resistor	4	5.6	8	kΩ	
R_{PD}	Pull-Down Resistor	4	5.6	8	kΩ	
V_{OH}	High Output Level	Vdd – 1.0	–	–	V	IOH = 10 mA, Vdd = 4.75 to 5.25V (8 total loads, 4 on even port pins (for example, P0[2], P1[4]), 4 on odd port pins (for example, P0[3], P1[5])). 80 mA maximum combined IOH budget.
V_{OL}	Low Output Level	–	–	0.75	V	IOL = 25 mA, Vdd = 4.75 to 5.25V (8 total loads, 4 on even port pins (for example, P0[2], P1[4]), 4 on odd port pins (for example, P0[3], P1[5])). 150 mA maximum combined IOL budget.
V_{IL}	Input Low Level	–	–	0.8	V	Vdd = 3.0 to 5.25.
V_{IH}	Input High Level	2.1	–		V	Vdd = 3.0 to 5.25.
V_H	Input Hysteresis	–	60	–	mV	
I_{IL}	Input Leakage (Absolute Value)	–	1	–	nA	Gross tested to 1 µA.
C_{IN}	Capacitive Load on Pins as Input	–	3.5	10	pF	Package and pin dependent. Temp = 25°C.
C_{OUT}	Capacitive Load on Pins as Output	–	3.5	10	pF	Package and pin dependent. Temp = 25°C.

11.3.3 DC Full-Speed USB Specifications

The following table lists guaranteed maximum and minimum specifications for the voltage and temperature ranges: 4.75V to 5.25V and 0°C ≤ T_A ≤ 70°C, or 3.0V to 3.6V and 0°C ≤ T_A ≤ 70°C, respectively. Typical parameters apply to 5V and 3.3V at 25°C and are for design guidance only.

Table 11-6. DC Full-Speed (12 Mbps) USB Specifications

Parameter	Description	Min.	Typ.	Max.	Unit	Notes
USB Interface						
V_{DI}	Differential Input Sensitivity	0.2	–	–	V	| (D+) – (D–) |
V_{CM}	Differential Input Common Mode Range	0.8	–	2.5	V	
V_{SE}	Single Ended Receiver Threshold	0.8	–	2.0	V	
C_{IN}	Transceiver Capacitance	–	–	20	pF	
I_{IO}	High-Z State Data Line Leakage	–10	–	10	µA	0V < V_{IN} < 3.3V.
R_{EXT}	External USB Series Resistor	23	–	25	W	In series with each USB pin.
V_{UOH}	Static Output High, Driven	2.8	–	3.6	V	15 kΩ ± 5% to Ground. Internal pull-up enabled.
V_{UOHI}	Static Output High, Idle	2.7	–	3.6	V	15 kΩ ± 5% to Ground. Internal pull-up enabled.
V_{UOL}	Static Output Low	–	–	0.3	V	15 kΩ ± 5% to Ground. Internal pull-up enabled.
Z_O	USB Driver Output Impedance	28	–	44	W	Including R_{EXT} Resistor.
V_{CRS}	D+/D– Crossover Voltage	1.3	–	2.0	V	

11.3.4 DC Analog Output Buffer Specifications

The following tables list guaranteed maximum and minimum specifications for the voltage and temperature ranges: 4.75V to 5.25V and 0°C ≤ T_A ≤ 70°C, or 3.0V to 3.6V and 0°C ≤ T_A ≤ 70°C, respectively. Typical parameters apply to 5V and 3.3V at 25°C and are for design guidance only.

Table 11-7. 5V DC Analog Output Buffer Specifications

Parameter	Description	Min.	Typ.	Max.	Unit	Notes
V_{OSOB}	Input Offset Voltage (Absolute Value)	–	3	12	mV	
TCV_{OSOB}	Average Input Offset Voltage Drift	–	+6	–	µV/°C	
V_{CMOB}	Common-Mode Input Voltage Range	0.5	–	Vdd - 1.0	V	
R_{OUTOB}	Output Resistance Power = Low Power = High	 – –	 0.6 0.6	 – –	 W W	
$V_{OHIGHOB}$	High Output Voltage Swing (Load = 32 ohms to Vdd/2) Power = Low Power = High	 0.5 x Vdd + 1.1 0.5 x Vdd + 1.1	 – –	 – –	 V V	
V_{OLOWOB}	Low Output Voltage Swing (Load = 32 ohms to Vdd/2) Power = Low Power = High	 – –	 – –	 0.5 x Vdd – 1.3 0.5 x Vdd – 1.3	 V V	
I_{SOB}	Supply Current Including Bias Cell (No Load) Power = Low Power = High	 – –	 1.1 2.6	 5.1 8.8	 mA mA	
$PSRR_{OB}$	Supply Voltage Rejection Ratio	53	64	–	dB	(0.5 x Vdd – 1.3) ≤ V_{OUT} ≤ (Vdd – 2.3).

Table 11-8. 3.3V DC Analog Output Buffer Specifications

Parameter	Description	Min.	Typ.	Max.	Unit	Notes
V_{OSOB}	Input Offset Voltage (Absolute Value)	–	3	12	mV	
TCV_{OSOB}	Average Input Offset Voltage Drift	–	+6	–	µV/°C	
V_{CMOB}	Common-Mode Input Voltage Range	0.5	-	Vdd - 1.0	V	
R_{OUTOB}	Output Resistance Power = Low Power = High	 – –	 1 1	 – –	 W W	
$V_{OHIGHOB}$	High Output Voltage Swing (Load = 1K ohms to Vdd/2) Power = Low Power = High	 0.5 x Vdd + 1.0 0.5 x Vdd + 1.0	 – –	 – –	 V V	
V_{OLOWOB}	Low Output Voltage Swing (Load = 1K ohms to Vdd/2) Power = Low Power = High	 – –	 – –	 0.5 x Vdd – 1.0 0.5 x Vdd – 1.0	 V V	
I_{SOB}	Supply Current Including Bias Cell (No Load) Power = Low Power = High	 –	 0.8 2.0	 2.0 4.3	 mA mA	
$PSRR_{OB}$	Supply Voltage Rejection Ratio	34	64	–	dB	(0.5 x Vdd – 1.0) ≤ V_{OUT} ≤ (0.5 x Vdd + 0.9).

11.3.5 DC Analog Reference Specifications

The following tables list guaranteed maximum and minimum specifications for the voltage and temperature ranges: 4.75V to 5.25V and 0°C ≤ T_A ≤ 70°C, or 3.0V to 3.6V and 0°C ≤ T_A ≤ 70°C, respectively. Typical parameters apply to 5V and 3.3V at 25°C and are for design guidance only.

Table 11-9. 5V DC Analog Reference Specifications

Parameter	Description	Min.	Typ.	Max.	Unit
BG	Bandgap Voltage Reference	1.28	1.30	1.32	V
–	AGND = Vdd/2[2]	Vdd/2 – 0.04	Vdd/2 – 0.01	Vdd/2 + 0.007	V
–	AGND = 2 x BandGap[2]	2 x BG – 0.048	2 x BG – 0.030	2 x BG + 0.024	V
–	AGND = P2[4] (P2[4] = Vdd/2)[2]	P2[4] – 0.011	P2[4]	P2[4] + 0.011	V
–	AGND = BandGap[2]	BG – 0.009	BG + 0.008	BG + 0.016	V
–	AGND = 1.6 x BandGap[2]	1.6 x BG – 0.022	1.6 x BG – 0.010	1.6 x BG + 0.018	V
–	AGND Block to Block Variation (AGND = Vdd/2)[2]	–0.034	0.000	0.034	V
–	RefHi = Vdd/2 + BandGap	Vdd/2 + BG – 0.10	Vdd/2 + BG	Vdd/2 + BG + 0.10	V
–	RefHi = 3 x BandGap	3 x BG – 0.06	3 x BG	3 x BG + 0.06	V
–	RefHi = 2 x BandGap + P2[6] (P2[6] = 1.3V)	2 x BG + P2[6] – 0.113	2 x BG + P2[6] – 0.018	2 x BG + P2[6] + 0.077	V
–	RefHi = P2[4] + BandGap (P2[4] = Vdd/2)	P2[4] + BG – 0.130	P2[4] + BG – 0.016	P2[4] + BG + 0.098	V
–	RefHi = P2[4] + P2[6] (P2[4] = Vdd/2, P2[6] = 1.3V)	P2[4] + P2[6] – 0.133	P2[4] + P2[6] – 0.016	P2[4] + P2[6]+ 0.100	V
–	RefHi = 3.2 x BandGap	3.2 x BG – 0.112	3.2 x BG	3.2 x BG + 0.076	V
–	RefLo = Vdd/2 – BandGap	Vdd/2 – BG – 0.04	Vdd/2 – BG + 0.024	Vdd/2 – BG + 0.04	V
–	RefLo = BandGap	BG – 0.06	BG	BG + 0.06	V
–	RefLo = 2 x BandGap – P2[6] (P2[6] = 1.3V)	2 x BG – P2[6] – 0.084	2 x BG – P2[6] + 0.025	2 x BG – P2[6] + 0.134	V
–	RefLo = P2[4] – BandGap (P2[4] = Vdd/2)	P2[4] – BG – 0.056	P2[4] – BG + 0.026	P2[4] – BG + 0.107	V
–	RefLo = P2[4]-P2[6] (P2[4] = Vdd/2, P2[6] = 1.3V)	P2[4] – P2[6] – 0.057	P2[4] – P2[6] + 0.026	P2[4] – P2[6] + 0.110	V

Table 11-10. 3.3V DC Analog Reference Specifications

Parameter	Description	Min.	Typ.	Max.	Unit
BG	Bandgap Voltage Reference	1.28	1.30	1.32	V
–	AGND = Vdd/2[2]	Vdd/2 – 0.03	Vdd/2 – 0.01	Vdd/2 + 0.005	V
–	AGND = 2 x BandGap[2]	Not Allowed			
–	AGND = P2[4] (P2[4] = Vdd/2)	P2[4] – 0.008	P2[4] + 0.001	P2[4] + 0.009	V
–	AGND = BandGap[2]	BG – 0.009	BG + 0.005	BG + 0.015	V
–	AGND = 1.6 x BandGap[2]	1.6 x BG – 0.027	1.6 x BG – 0.010	1.6 x BG + 0.018	V
–	AGND Column to Column Variation (AGND = Vdd/2)[2]	–0.034	0.000	0.034	V
–	RefHi = Vdd/2 + BandGap	Not Allowed			
–	RefHi = 3 x BandGap	Not Allowed			
–	RefHi = 2 x BandGap + P2[6] (P2[6] = 0.5V)	Not Allowed			
–	RefHi = P2[4] + BandGap (P2[4] = Vdd/2)	Not Allowed			
–	RefHi = P2[4] + P2[6] (P2[4] = Vdd/2, P2[6] = 0.5V)	P2[4] + P2[6] – 0.075	P2[4] + P2[6] – 0.009	P2[4] + P2[6] + 0.057	V
–	RefHi = 3.2 x BandGap	Not Allowed			
–	RefLo = Vdd/2 – BandGap	Not Allowed			
–	RefLo = BandGap	Not Allowed			
–	RefLo = 2 x BandGap - P2[6] (P2[6] = 0.5V)	Not Allowed			
–	RefLo = P2[4] – BandGap (P2[4] = Vdd/2)	Not Allowed			
–	RefLo = P2[4]-P2[6] (P2[4] = Vdd/2, P2[6] = 0.5V)	P2[4] – P2[6] – 0.048	P2[4] – P2[6] + 0.022	P2[4] – P2[6] + 0.092	V

Note:
2. AGND tolerance includes the offsets of the local buffer in the enCoRe III block. Bandgap voltage is 1.3V ± 0.02V.

11.3.6 DC Analog enCoRe III Block Specifications

The following table lists guaranteed maximum and minimum specifications for the voltage and temperature ranges: 4.75V to 5.25V and 0°C ≤ T_A ≤ 70°C, or 3.0V to 3.6V and 0°C ≤ T_A ≤ 70°C, respectively. Typical parameters apply to 5V and 3.3V at 25°C and are for design guidance only.

Table 11-11. DC Analog enCoRe III Block Specifications

Parameter	Description	Min.	Typ.	Max.	Unit	Notes
R_{CT}	Resistor Unit Value (Continuous Time)	–	12.2	–	kΩ	
C_{SC}	Capacitor Unit Value (Switched Capacitor)	–	80	–	fF	

11.3.7 DC POR and LVD Specifications

The following table lists guaranteed maximum and minimum specifications for the voltage and temperature ranges: 4.75V to 5.25V and 0°C ≤ T_A ≤ 70°C, or 3.0V to 3.6V and 0°C ≤ T_A ≤ 70°C, respectively. Typical parameters apply to 5V or 3.3V at 25°C and are for design guidance only.

Note The bits PORLEV and VM in the table below refer to bits in the VLT_CR register. See the *PSoC Mixed-Signal Array Technical Reference Manual* for more information on the VLT_CR register.

Table 11-12. DC POR and LVD Specifications

Parameter	Description	Min.	Typ.	Max.	Unit	Notes
	Vdd Value for PPOR Trip (positive ramp)					
V_{PPOR0R}	PORLEV[1:0] = 00b		2.91		V	
V_{PPOR1R}	PORLEV[1:0] = 01b	–	4.39	–	V	
V_{PPOR2R}	PORLEV[1:0] = 10b		4.55		V	
	Vdd Value for PPOR Trip (negative ramp)					
V_{PPOR0}	PORLEV[1:0] = 00b		2.82		V	
V_{PPOR1}	PORLEV[1:0] = 01b	–	4.39	–	V	
V_{PPOR2}	PORLEV[1:0] = 10b		4.55		V	
	PPOR Hysteresis					
V_{PH0}	PORLEV[1:0] = 00b	–	92	–	mV	
V_{PH1}	PORLEV[1:0] = 01b	–	0	–	mV	
V_{PH2}	PORLEV[1:0] = 10b	–	0	–	mV	
	Vdd Value for LVD Trip					
V_{LVD0}	VM[2:0] = 000b	2.86	2.92	2.98[3]	V	
V_{LVD1}	VM[2:0] = 001b	2.96	3.02	3.08	V	
V_{LVD2}	VM[2:0] = 010b	3.07	3.13	3.20	V	
V_{LVD3}	VM[2:0] = 011b	3.92	4.00	4.08	V	
V_{LVD4}	VM[2:0] = 100b	4.39	4.48	4.57	V	
V_{LVD5}	VM[2:0] = 101b	4.55	4.64	4.74[4]	V	
V_{LVD6}	VM[2:0] = 110b	4.63	4.73	4.82	V	
V_{LVD7}	VM[2:0] = 111b	4.72	4.81	4.91	V	

Notes:
3. Always greater than 50 mV above PPOR (PORLEV = 00) for falling supply.
4. Always greater than 50 mV above PPOR (PORLEV = 10) for falling supply.

11.3.8 DC Programming Specifications

The following table lists guaranteed maximum and minimum specifications for the voltage and temperature ranges: 4.75V to 5.25V and 0°C ≤ T_A ≤ 70°C, or 3.0V to 3.6V and 0°C ≤ T_A ≤ 70°C, respectively. Typical parameters apply to 5V and 3.3V at 25°C and are for design guidance only.

Table 11-13. DC Programming Specifications

Parameter	Description	Min.	Typ.	Max.	Unit	Notes
I_{DDP}	Supply Current During Programming or Verify	–	15	30	mA	
V_{ILP}	Input Low Voltage During Programming or Verify	–	–	0.8	V	
V_{IHP}	Input High Voltage During Programming or Verify	2.1	–	–	V	
I_{ILP}	Input Current when Applying Vilp to P1[0] or P1[1] During Programming or Verify	–	–	0.2	mA	Driving internal pull-down resistor.
I_{IHP}	Input Current when Applying Vihp to P1[0] or P1[1] During Programming or Verify	–	–	1.5	mA	Driving internal pull-down resistor.
V_{OLV}	Output Low Voltage During Programming or Verify	–	–	Vss + 0.75	V	
V_{OHV}	Output High Voltage During Programming or Verify	Vdd – 1.0	–	Vdd	V	
$Flash_{ENPB}$	Flash Endurance (per block)	50,000	–	–	–	Erase/write cycles per block.
$Flash_{ENT}$	Flash Endurance (total)[5]	1,800,000	–	–	–	Erase/write cycles.
$Flash_{DR}$	Flash Data Retention	10	–	–	Years	

Note:

5. A maximum of 36 x 50,000 block endurance cycles is allowed. This may be balanced between operations on 36x1 blocks of 50,000 maximum cycles each, 36x2 blocks of 25,000 maximum cycles each, or 36x4 blocks of 12,500 maximum cycles each (to limit the total number of cycles to 36x50,000 and that no single block ever sees more than 50,000 cycles).

   For the full industrial range, the user must employ a temperature sensor user module (FlashTemp) and feed the result to the temperature argument before writing. Refer to the Flash APIs Application Note AN2015 at http://www.cypress.com under Application Notes for more information.

11.4 AC Electrical Characteristics

11.4.1 AC Chip-Level Specifications

The following table lists guaranteed maximum and minimum specifications for the voltage and temperature ranges: 4.75V to 5.25V and 0°C ≤ T_A ≤ 70°C, or 3.0V to 3.6V and 0°C ≤ T_A ≤ 70°C, respectively. Typical parameters apply to 5V and 3.3V at 25°C and are for design guidance only.

Table 11-14. AC Chip-Level Specifications

Parameter	Description	Min.	Typ.	Max.	Unit	Notes
$F_{IMO245V}$	Internal Main Oscillator Frequency for 24 MHz (5V)	23.04	24	24.96[6, 7]	MHz	Trimmed for 5V operation using factory trim values.
$F_{IMO243V}$	Internal Main Oscillator Frequency for 24 MHz (3.3V)	22.08	24	25.92[6,8]	MHz	Trimmed for 3.3V operation using factory trim values.
F_{IMOUSB}	Internal Main Oscillator Frequency with USB Frequency locking enabled and USB traffic present.	23.94	24	24.06[7]	MHz	0°C ≤ T_A ≤ 70°C
F_{CPU1}	CPU Frequency (5V Nominal)	0.93	24	24.96[6,7]	MHz	
F_{CPU2}	CPU Frequency (3.3V Nominal)	0.93	12	12.96[7, 8]	MHz	
F_{BLK5}	Digital PSoC Block Frequency (5V Nominal)	0	48	49.92[6, 7, 9]	MHz	Refer to the AC Digital Block Specifications.
F_{BLK3}	Digital PSoC Block Frequency (3.3V Nominal)	0	24	25.92[7, 9]	MHz	
F_{32K1}	Internal Low Speed Oscillator Frequency	15	32	64	kHz	
Jitter32k	32-kHz Period Jitter	–	100		ns	
Step24M	24-MHz Trim Step Size	–	50	–	kHz	
Fout48M	48-MHz Output Frequency	46.08	48.0	49.92[6, 8]	MHz	Trimmed. Utilizing factory trim values.
Jitter24M1	24-MHz Period Jitter (IMO) Peak-to-Peak	–	300		ps	
F_{MAX}	Maximum frequency of signal on row input or row output.	–	–	12.96	MHz	
T_{RAMP}	Supply Ramp Time	0	–	–	µs	

Notes:
6. 4.75V < Vdd < 5.25V.
7. Accuracy derived from Internal Main Oscillator with appropriate trim for Vdd range.
8. 3.0V < Vdd < 3.6V. See Application Note AN2012 “Adjusting PSoC Microcontroller Trims for Dual Voltage-Range Operation” for information on trimming for operation at 3.3V.
9. See the individual user module data sheets for information on maximum frequencies for user modules.

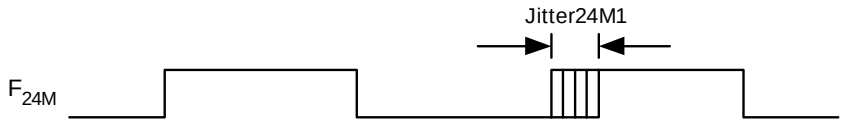

Figure 11-2. 24 MHz Period Jitter (IMO) Timing Diagram

11.4.2 AC General Purpose IO Specifications

The following table lists guaranteed maximum and minimum specifications for the voltage and temperature ranges: 4.75V to 5.25V and 0°C ≤ T_A ≤ 70°C, or 3.0V to 3.6V and 0°C ≤ T_A ≤ 70°C, respectively. Typical parameters apply to 5V and 3.3V at 25°C and are for design guidance only.

Table 11-15. AC GPIO Specifications

Parameter	Description	Min.	Typ.	Max.	Unit	Notes
F_{GPIO}	GPIO Operating Frequency	0	–	12	MHz	Normal Strong Mode
TRiseF	Rise Time, Normal Strong Mode, Cload = 50 pF	3	–	18	ns	Vdd = 4.5 to 5.25V, 10%–90%
TFallF	Fall Time, Normal Strong Mode, Cload = 50 pF	2	–	18	ns	Vdd = 4.5 to 5.25V, 10%–90%
TRiseS	Rise Time, Slow Strong Mode, Cload = 50 pF	10	27	–	ns	Vdd = 3 to 5.25V, 10%–90%
TFallS	Fall Time, Slow Strong Mode, Cload = 50 pF	10	22	–	ns	Vdd = 3 to 5.25V, 10%–90%

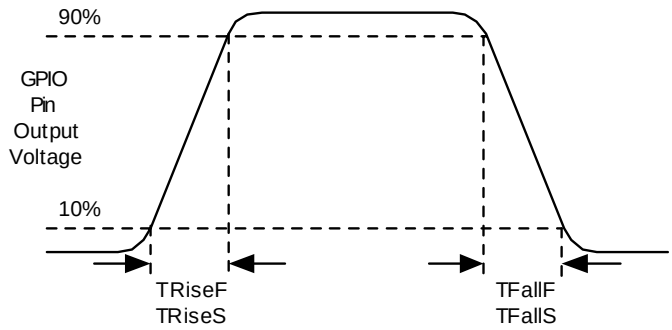

Figure 11-3. GPIO Timing Diagram

11.4.3 AC Full-Speed USB Specifications

The following table lists guaranteed maximum and minimum specifications for the voltage and temperature ranges: 4.75V to 5.25V and 0°C ≤ T_A ≤ 70°C, or 3.0V to 3.6V and 0°C ≤ T_A ≤ 70°C, respectively. Typical parameters apply to 5V and 3.3V at 25°C and are for design guidance only.

Table 11-16. AC Full-Speed (12 Mbps) USB Specifications

Parameter	Description	Min.	Typ.	Max.	Unit	Notes
T_{RFS}	Transition Rise Time	4	–	20	ns	For 50 pF load.
T_{FSS}	Transition Fall Time	4	–	20	ns	For 50 pF load.
T_{RFMFS}	Rise/Fall Time Matching: (T_R/T_F)	90	–	111	%	For 50 pF load.
$T_{DRATEFS}$	Full-Speed Data Rate	12 – 0.25%	12	12 + 0.25%	Mbps	

11.4.4 AC Digital Block Specifications

The following table lists guaranteed maximum and minimum specifications for the voltage and temperature ranges: 4.75V to 5.25V and 0°C ≤ T_A ≤ 70°C, or 3.0V to 3.6V and 0°C ≤ T_A ≤ 70°C, respectively. Typical parameters apply to 5V and 3.3V at 25°C and are for design guidance only.

Table 11-17. AC Digital Block Specifications

Function	Description	Min.	Typ.	Max.	Unit	Notes
Timer	Capture Pulse Width	50[10]	–	–	ns	
	Maximum Frequency, No Capture	–	–	49.92	MHz	4.75V < Vdd < 5.25V.
	Maximum Frequency, With Capture	–	–	25.92	MHz	
Counter	Enable Pulse Width	50[10]	–	–	ns	
	Maximum Frequency, No Enable Input	–	–	49.92	MHz	4.75V < Vdd < 5.25V.
	Maximum Frequency, Enable Input	–	–	25.92	MHz	
Dead Band	Kill Pulse Width:					
	Asynchronous Restart Mode	20	–	–	ns	
	Synchronous Restart Mode	50[10]	–	–	ns	
	Disable Mode	50[10]	–	–	ns	
	Maximum Frequency	–	–	49.92	MHz	4.75V < Vdd < 5.25V.
CRCPRS (PRS Mode)	Maximum Input Clock Frequency	–	–	49.92	MHz	4.75V < Vdd < 5.25V.
CRCPRS (CRC Mode)	Maximum Input Clock Frequency	–	–	24.6	MHz	
SPIM	Maximum Input Clock Frequency	–	–	8.2	MHz	Maximum data rate at 4.1 MHz due to 2 x over clocking.
SPIS	Maximum Input Clock Frequency	–	–	4.1	MHz	
	Width of SS_ Negated Between Transmissions	50[10]	–	–	ns	
Transmitter	Maximum Input Clock Frequency	–	–	24.6	MHz	Maximum data rate at 3.08 MHz due to 8 x over clocking.
Receiver	Maximum Input Clock Frequency	–	–	24.6	MHz	Maximum data rate at 3.08 MHz due to 8 x over clocking.

Note:
10. 50 ns minimum input pulse width is based on the input synchronizers running at 24 MHz (42 ns nominal period).

11.4.5 AC External Clock Specifications

The following tables list guaranteed maximum and minimum specifications for the voltage and temperature ranges: 4.75V to 5.25V and 0°C ≤ T_A ≤ 70°C, or 3.0V to 3.6V and 0°C ≤ T_A ≤ 70°C, respectively. Typical parameters apply to 5V and 3.3V at 25°C and are for design guidance only.

Table 11-18. AC External Clock Specifications

Parameter	Description	Min.	Typ.	Max.	Unit	Notes
F_{OSCEXT}	Frequency for USB Applications	23.94	24	24.06	MHz	
–	Duty Cycle	47	50	53	%	
–	Power up to IMO Switch	150	–	–	µs	

11.4.6 AC Analog Output Buffer Specifications

The following tables list guaranteed maximum and minimum specifications for the voltage and temperature ranges: 4.75V to 5.25V and 0°C ≤ T_A ≤ 70°C, or 3.0V to 3.6V and 0°C ≤ T_A ≤ 70°C, respectively. Typical parameters apply to 5V and 3.3V at 25°C and are for design guidance only.

Table 11-19. 5V AC Analog Output Buffer Specifications

Parameter	Description	Min.	Typ.	Max.	Unit	Notes
T_{ROB}	Rising Settling Time to 0.1%, 1V Step, 100-pF Load					
	Power = Low	–	–	2.5	µs	
	Power = High	–	–	2.5	µs	
T_{SOB}	Falling Settling Time to 0.1%, 1V Step, 100-pF Load					
	Power = Low	–	–	2.2	µs	
	Power = High	–	–	2.2	µs	
SR_{ROB}	Rising Slew Rate (20% to 80%), 1V Step, 100-pF Load					
	Power = Low	0.65	–	–	V/µs	
	Power = High	0.65	–	–	V/µs	
SR_{FOB}	Falling Slew Rate (80% to 20%), 1V Step, 100-pF Load					
	Power = Low	0.65	–	–	V/µs	
	Power = High	0.65	–	–	V/µs	
BW_{OBSS}	Small Signal Bandwidth, 20mV_{pp}, 3-dB BW, 100-pF Load					
	Power = Low	0.8	–	–	MHz	
	Power = High	0.8	–	–	MHz	
BW_{OBLS}	Large Signal Bandwidth, 1V_{pp}, 3-dB BW, 100-pF Load					
	Power = Low	300	–	–	kHz	
	Power = High	300	–	–	kHz	

Table 11-20. 3.3V AC Analog Output Buffer Specifications

Parameter	Description	Min.	Typ.	Max.	Unit	Notes
T_{ROB}	Rising Settling Time to 0.1%, 1V Step, 100-pF Load					
	Power = Low	–	–	3.8	µs	
	Power = High	–	–	3.8	µs	
T_{SOB}	Falling Settling Time to 0.1%, 1V Step, 100-pF Load					
	Power = Low	–	–	2.6	µs	
	Power = High	–	–	2.6	µs	
SR_{ROB}	Rising Slew Rate (20% to 80%), 1V Step, 100-pF Load					
	Power = Low	0.5	–	–	V/µs	
	Power = High	0.5	–	–	V/µs	
SR_{FOB}	Falling Slew Rate (80% to 20%), 1V Step, 100-pF Load					
	Power = Low	0.5	–	–	V/µs	
	Power = High	0.5	–	–	V/µs	
BW_{OBSS}	Small Signal Bandwidth, 20mV_{pp}, 3dB BW, 100-pF Load					
	Power = Low	0.7	–	–	MHz	
	Power = High	0.7	–	–	MHz	
BW_{OBLS}	Large Signal Bandwidth, 1V_{pp}, 3dB BW, 100-pF Load					
	Power = Low	200	–	–	kHz	
	Power = High	200	–	–	kHz	

11.4.7 AC Programming Specifications

The following table lists guaranteed maximum and minimum specifications for the voltage and temperature ranges: 4.75V to 5.25V and 0°C ≤ T_A ≤ 70°C, or 3.0V to 3.6V and 0°C ≤ T_A ≤ 70°C, respectively. Typical parameters apply to 5V and 3.3V at 25°C and are for design guidance only.

Table 11-21. AC Programming Specifications

Parameter	Description	Min.	Typ.	Max.	Unit	Notes
T_{RSCLK}	Rise Time of SCLK	1	–	20	ns	
T_{FSCLK}	Fall Time of SCLK	1	–	20	ns	
T_{SSCLK}	Data Set up Time to Falling Edge of SCLK	40	–	–	ns	
T_{HSCLK}	Data Hold Time from Falling Edge of SCLK	40	–	–	ns	
F_{SCLK}	Frequency of SCLK	0	–	8	MHz	
T_{ERASEB}	Flash Erase Time (Block)	–	10	–	ms	
T_{WRITE}	Flash Block Write Time	–	30	–	ms	
T_{DSCLK}	Data Out Delay from Falling Edge of SCLK	–	–	45	ns	Vdd > 3.6
T_{DSCLK3}	Data Out Delay from Falling Edge of SCLK	–	–	50	ns	3.0 ≤ Vdd ≤ 3.6

11.4.8 AC I^2C Specifications

The following table lists guaranteed maximum and minimum specifications for the voltage and temperature ranges: 4.75V to 5.25V and 0°C ≤ T_A ≤ 70°C, or 3.0V to 3.6V and 0°C ≤ T_A ≤ 70°C, respectively. Typical parameters apply to 5V and 3.3V at 25°C and are for design guidance only.

Table 11-22. AC Characteristics of the I^2C SDA and SCL Pins for Vdd

Parameter	Description	Standard Mode		Fast Mode		Unit	Notes
		Min.	Max.	Min.	Max.		
F_{SCLI2C}	SCL Clock Frequency	0	100	0	400	kHz	
$T_{HDSTAI2C}$	Hold Time (repeated) START Condition. After this period, the first clock pulse is generated.	4.0	–	0.6	–	µs	
T_{LOWI2C}	LOW Period of the SCL Clock	4.7	–	1.3	–	µs	
$T_{HIGHI2C}$	HIGH Period of the SCL Clock	4.0	–	0.6	–	µs	
$T_{SUSTAI2C}$	Set-up Time for a Repeated START Condition	4.7	–	0.6	–	µs	
$T_{HDDATI2C}$	Data Hold Time	0	–	0	–	µs	
$T_{SUDATI2C}$	Data Set-up Time	250	–	100[11]	–	ns	
$T_{SUSTOI2C}$	Set-up Time for STOP Condition	4.0	–	0.6	–	µs	
T_{BUFI2C}	Bus Free Time Between a STOP and START Condition	4.7	–	1.3	–	µs	
T_{SPI2C}	Pulse Width of spikes are suppressed by the input filter.	–	–	0	50	ns	

Note:

11. A Fast-Mode I2C-bus device can be used in a Standard-Mode I2C-bus system, but the requirement $t_{SU;DAT} \geq 250$ ns must then be met. This will automatically be the case if the device does not stretch the LOW period of the SCL signal. If such device does stretch the LOW period of the SCL signal, it must output the next data bit to the SDA line $t_{rmax} + t_{SU;DAT} = 1000 + 250 = 1250$ ns (according to the Standard-Mode I2C-bus specification) before the SCL line is released.

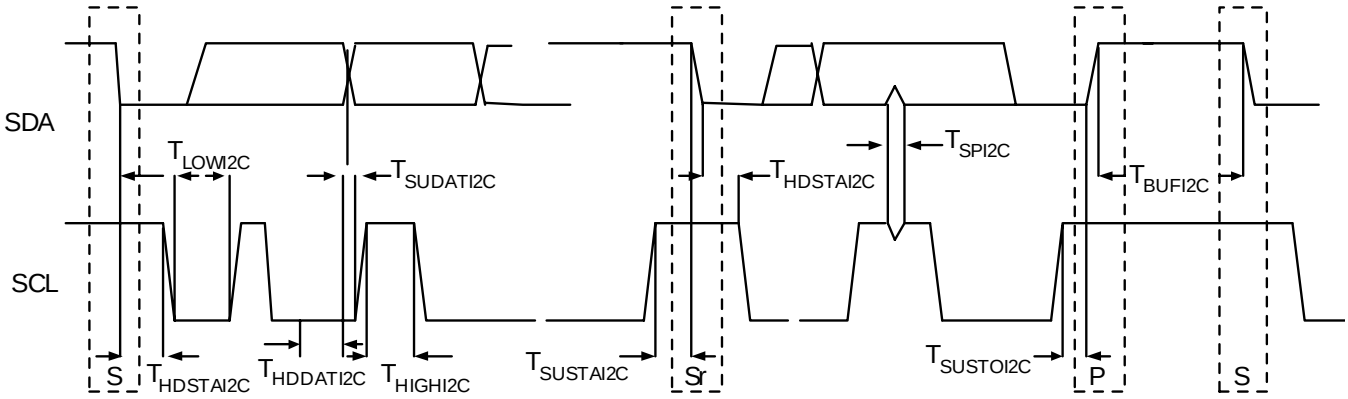

Figure 11-4. Definition for Timing for Fast/Standard Mode on the I²C Bus

12.0 Packaging Information

This section illustrates the package specification for the CY7C64215 enCoRe III, along with the thermal impedance for the package.

Important Note Emulation tools may require a larger area on the target PCB than the chip's footprint. For a detailed description of the emulation tools' dimensions, refer to the document titled *PSoC Emulator Pod Dimensions* at http://www.cypress.com/support/link.cfm?mr=poddim.

12.1 Packaging Dimensions

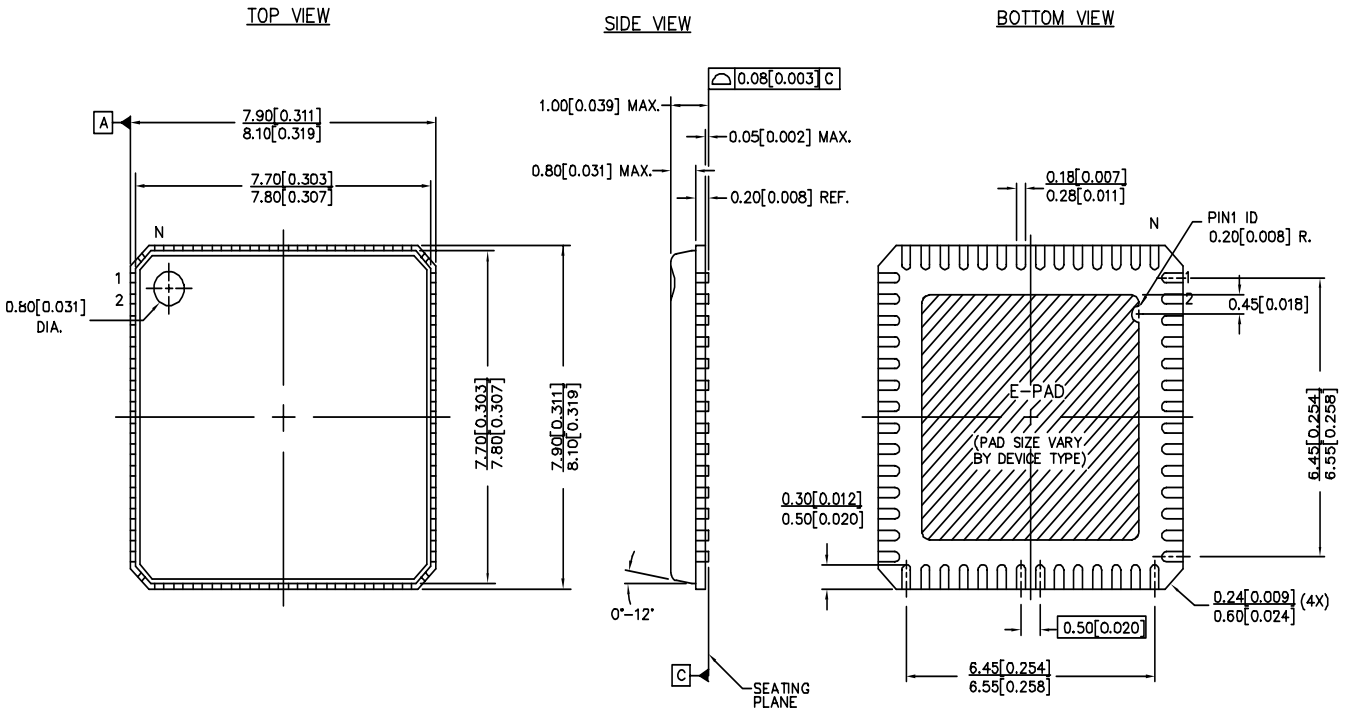

Figure 12-1. 56-Lead (8x8 mm) MLF

Important Note For information on the preferred dimensions for mounting MLF packages, see the following Application Note at http://www.amkor.com/products/notes_papers/MLFAppNote.pdf.

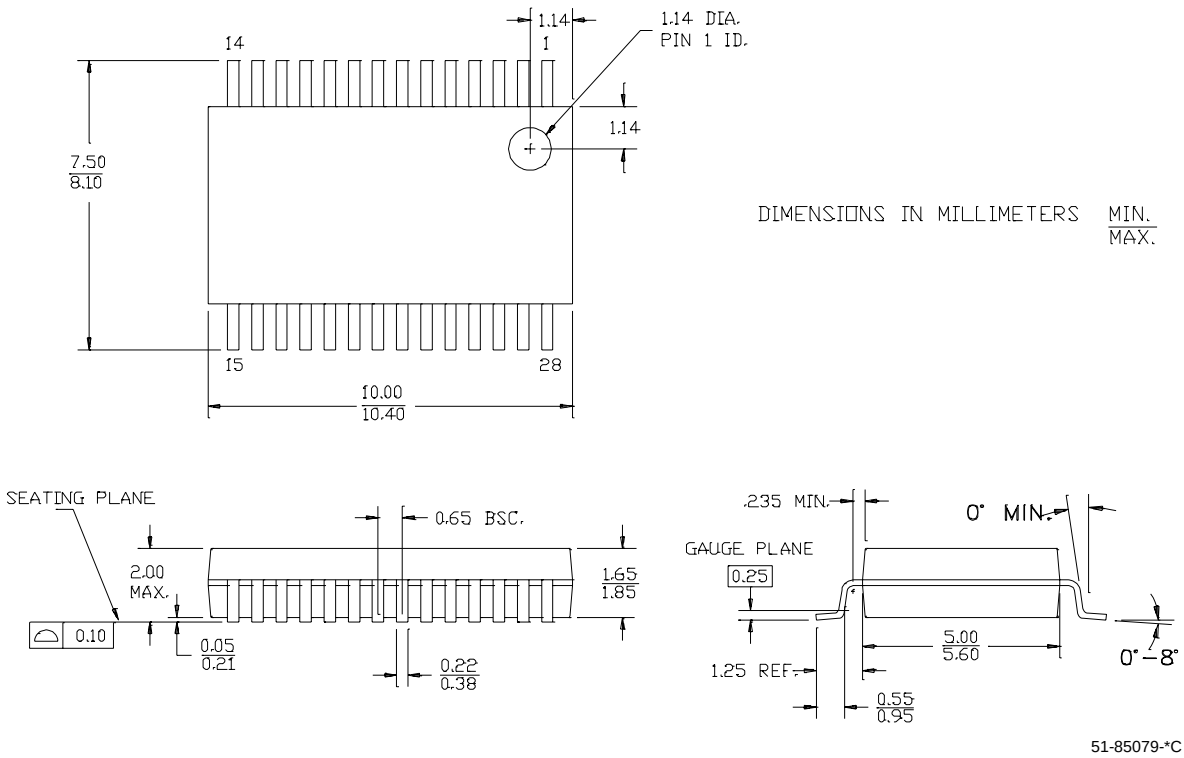

Figure 12-2. 28-Lead Shrunk Small Outline Package

12.2 Thermal Impedance

Table 12-1. Thermal Impedance for the Package

Package	Typical θ_{JA} *
56 MLF	20 °C/W
28 SSOP	96 °C/W

* $T_J = T_A + POWER \times \theta_{JA}$

12.3 Solder Reflow Peak Temperature

Following is the minimum solder reflow peak temperature to achieve good solderability.

Table 12-2. Solder Reflow Peak Temperature

Package	Minimum Peak Temperature*	Maximum Peak Temperature
56 MLF	240°C	260°C
28 SSOP	240°C	260°C

*Higher temperatures may be required based on the solder melting point. Typical temperatures for solder are 220±5°C with Sn-Pb or 245±5°C with Sn-Ag-Cu paste. Refer to the solder manufacturer specifications.

13.0 Ordering Information

Table 13-1. CY8C24794 PSoC Device Key Features and Ordering Information

Package	Ordering Code	Flash Size	SRAM (Bytes)
56 Pin MLF	CY7C64215-56LFXC	16K	1K
28 Pin SSOP	CY7C64215-28PVXC	16K	1K

Microsoft and Windows are registered trademarks of Microsoft Corporation.

Purchase of I2C components from Cypress or one of its sublicensed Associated Companies conveys a license under the Philips I2C Patent Rights to use these components in an I2C system, provided that the system conforms to the I2C Standard Specification as defined by Philips.

enCoRe, PSoC, and Programmable System-on-Chip are trademarks of Cypress Semiconductor Corporation. All products and company names mentioned in this document may be the trademarks of their respective holders.

© Cypress Semiconductor Corporation, 2005. The information contained herein is subject to change without notice. Cypress Semiconductor Corporation assumes no responsibility for the use of any circuitry other than circuitry embodied in a Cypress product. Nor does it convey or imply any license under patent or other rights. Cypress products are not warranted nor intended to be used for medical, life support, life saving, critical control or safety applications, unless pursuant to an express written agreement with Cypress. Furthermore, Cypress does not authorize its products for use as critical components in life-support systems where a malfunction or failure may reasonably be expected to result in significant injury to the user. The inclusion of Cypress products in life-support systems application implies that the manufacturer assumes all risk of such use and in doing so indemnifies Cypress against all charges.

Document History Page

Description Title: CY7C64215, enCoRe™ III Full Speed USB Controller Document Number: 38-08036				
REV.	**ECN NO.**	**Issue Date**	**Orig. of Change**	**Description of Change**
**	131325	See ECN	XGR	New data sheet
*A	385256	See ECN	BHA	Changed from Advance Information to Preliminary. Added standard data sheet items. Changed Part number from CY7C642xx to CY7C64215.